Videolarm

REVISION DATE: May 7, 2003

PRODUCT INSTRUCTIONS

	Specification Number	Catalog Section
INSTRUCTIONS	5190	1b
MODEL: Indoor Wall/Corner/Ceiling Housings AMS90, AMS180		

STANDARD INSTALLATION PROCEDURE

UL LISTED

INCLUDES MODELS: AMS90, AMS180

c UL LISTED

CONTENTS INCLUDED IN BOX:

(1) Housing
(1) 1/4-20X1/2 Hex Bolt
(1) 1/4 SAE Flat Washer
(1) 1/4 Split Lock Washer
(1) O-Ring
(1) Window Shield

1. Open the lid of the unit with the barrel lock key (Figure 1).
   NOTE: Key is removable only when the lid is locked.
2. To access the inside of the unit during mounting and adjusting, the lid can be temporarily propped open by using a screwdriver or similar object (Figure 2).
3. Position the unit in the desired location and mark the spots for the four mounting holes. For best results, use the actual housing to obtain placements of the mounting holes. The hole location diagrams are for general reference only.
4. Prepare spots marked on the mounting surfaces as required by applicable building codes before mounting the unit.
5. Pass electrical and video cables through the access hole on the back of the unit, or use any of the knockout hole(s), then secure the unit in place with appropriate hardware.
6. Complete electrical and video connections for the camera before attaching the camera to the camera bracket. To attach, use the hardware provided in the packet, assembling as shown in Figure 3A.
   NOTE: Use with Class 2 power supply only.
7. To achieve the desired camera position, adjust the hex bolt and slotted screw with proper tools. Figure 3 shows the three directions the camera & the bracket can be maneuvered.
   NOTE: Place the lens as close to the viewing window as possible to provide adequate room in the back for cables & connectors. To help reduce the strain on the coax cable connection, a right angle coax connector is strongly recommended.
8. After tightening all fasteners, close and lock the lid to complete the installation.

Changing the Window Shield

To restore the clarity of the viewing window in the event of vandalism involving spray paint or other view-blocking agents, remove the damaged shield and replace it with one of the extra shields provided (Figure 4). More shields may be ordered, using part #27-SHNMS.

For Outdoor Use: A 24 VAC Heater Kit is available for units installed outdoors, but protected from direct exposure to the elements. Order part # HTK24 and follow instructions provided.

DO NOT EXPOSE ENCLOSURE TO RAIN OR MOISTURE

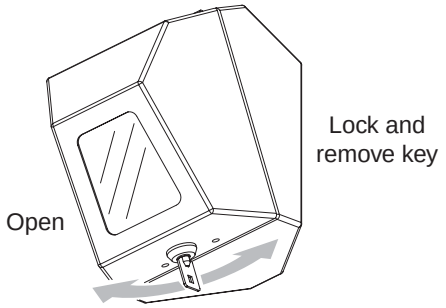

Figure 1

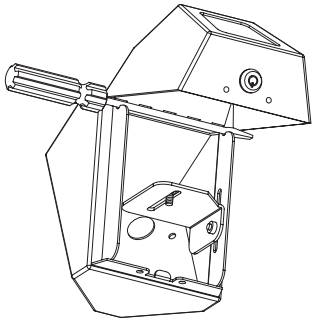
Figure 2

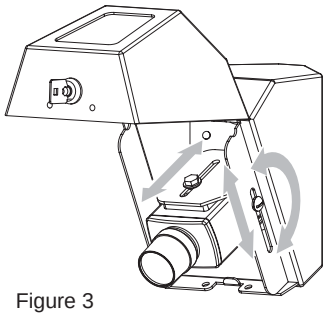
Figure 3

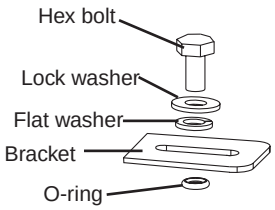

Figure 3A

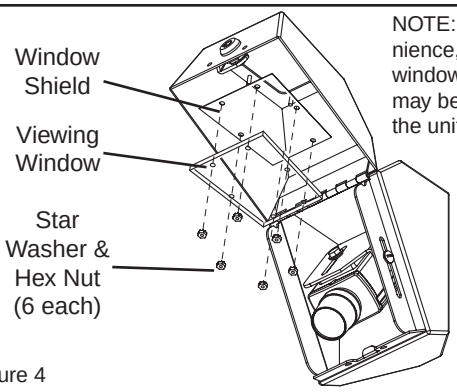

NOTE: For convenience, the extra window shields may be stored in the unit

Figure 4

2525 Park Central Blvd. • Decatur, GA 30035 • (770) 987-7550 • 800-554-1124 U.S. & Canada • Fax 800-826-0366 • www.videolarm.com

PARTS LIST

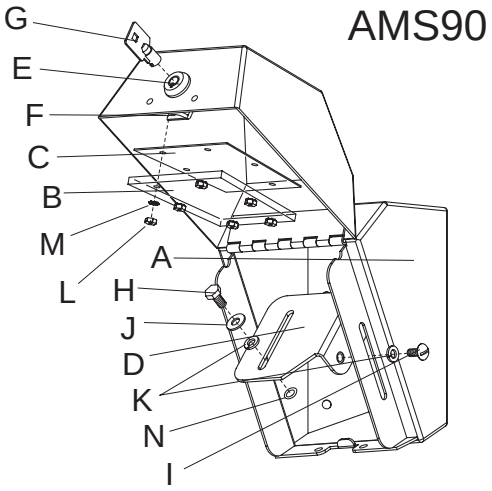

	Description	Part Number	Qty
A	AMS90 Housing w/ Lid	50-VL-1466	1
B	Viewing Window	27-WDNMS	1
C	Window Shield	27-SHNMS	1
D	AMS Camera Bracket	30-VL-1452	1
E	AMS Barrel Lock	95-FSLK02	1
F	AMS Barrel Lock Cam	95-FSCM01	1
G	AMS Barrel Lock Key	95-FSKY04	2
H	1/4-20X1/2 Hex Bolt	90-BTHH32	1
I	1/4-2X1/2 Slotted Screw	90-BTHH04	1
J	1/4 SAE Flat Washer	92-WSFL01	1
K	1/4 Split Lock Washer	92-WSSL01	2
L	#6 Hex Nut	91-NTHH04	6
M	#6 Star Washer	92-WSTH01	6
N	O-Ring	96-RSORNG	1

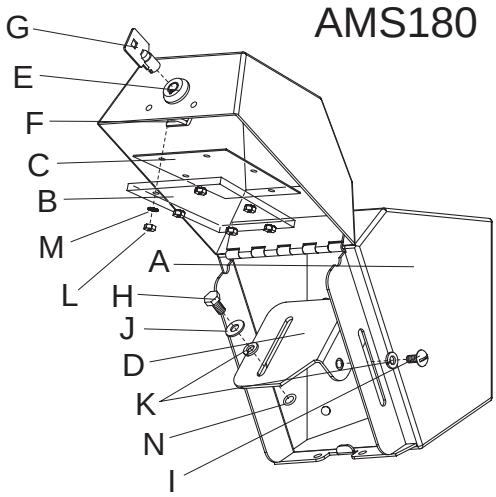

	Description	Part Number	Qty
A	AMS180 Housing w/ Lid	50-VL-1467	1
B	Viewing Window	27-WDNMS	1
C	Window Shield	27-SHNMS	1
D	AMS Camera Bracket	30-VL-1452	1
E	AMS Barrel Lock	95-FSLK02	1
F	AMS Barrel Lock Cam	95-FSCM01	1
G	AMS Barrel Lock Key	95-FSKY04	2
H	1/4-20X1/2 Hex Bolt	90-BTHH32	1
I	1/4-2X1/2 Slotted Screw	90-BTHH04	1
J	1/4 SAE Flat Washer	92-WSFL01	1
K	1/4 Split Lock Washer	92-WSSL01	2
L	#6 Hex Nut	91-NTHH04	6
M	#6 Star Washer	92-WSTH01	6
N	O-Ring	96-RSORNG	1

General Dimensions / Mounting Hole & Cable Access Hole Location Diagrams

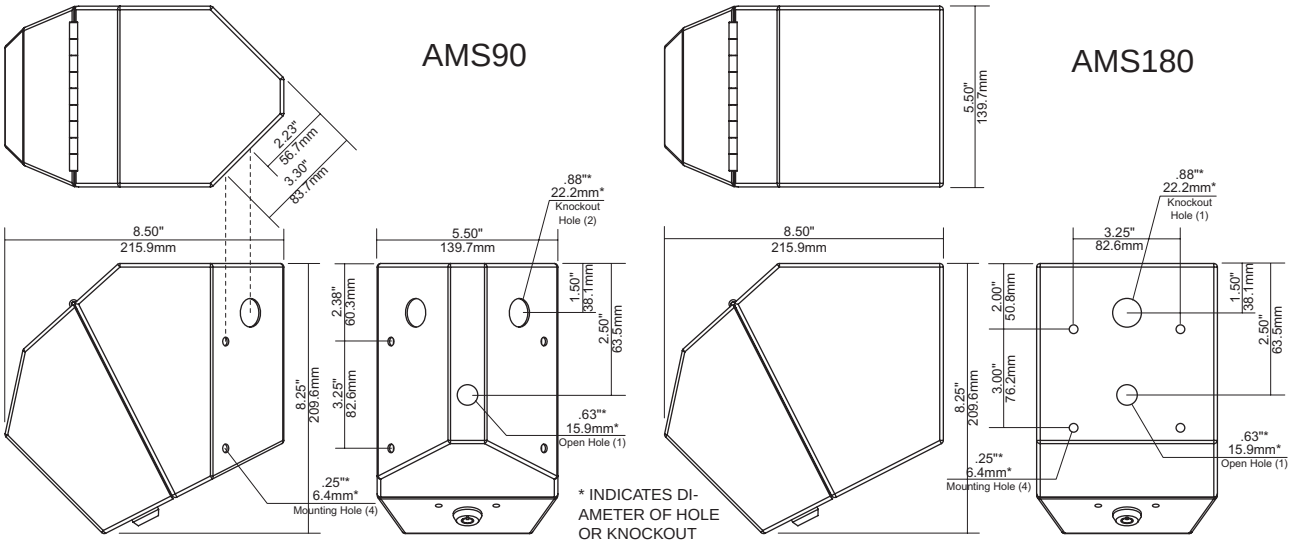

(FOR REFERENCE USE ONLY AS ACTUAL DIMENSIONS MAY VARY SLIGHTLY FROM UNIT TO UNIT)

IMPORTANT SAFEGUARDS

1. **Read Instructions -** All the safety and operating instructions should be read before the unit is operated.
2. **Retain Instructions -** The safety and operating instructions should be retained for future reference.
3. **Heed Warnings -** All warnings on the unit and in the operating instructions should be adhered to.
4. **Follow Instructions -** All operating and user instructions should be followed.
5. **Electrical Connections -** Only a qualified electrician should make electrical connections.
6. **Attachments -** Do not use attachments not recommended by the product manufacturer as they may cause hazards.
7. **Cable Runs -** All cable runs must be within permissible distance.
8. **Mounting -** This unit must be properly and securely mounted to a supporting structure capable of sustaining the weight of the unit. Accordingly:
   a. The installation should be made by a qualified installer.
   b. The installation should be in compliance with local codes.
   c. Care should be exercised to select suitable hardware to install the unit, taking into account both the composition of the mounting surface and the weight of the unit. Be sure to periodically examine the unit and the supporting structure to make sure that the integrity of the installation is intact. Failure to comply with the foregoing could result in the unit separating from the support structure and falling, with resultant damages or injury to anyone or anything struck by the falling unit.

DOME/HOUSING/ELECTRICAL COMPONENT WARRANTY INFORMATION

Videolarm, Incorporated warrants that its domes and housing sold hereunder shall be fit for the ordinary purpose for which said products are intended and shall be free from defects in material and workmanship for a period of five years from date of sale to buyer. Note that all electrical components will be warranted for a period of two years from date of sale to buyer. Videolarm makes no other warranty of any kind with respect to this product, whether expressed or implied, including, without limitation, the implied warranty of fitness for a particular purpose.

In the event of a breach of the above warranty, Videolarm shall, at its option, repair or replace said product. This is Videolarm's sole obligation under this warranty. In no event shall Videolarm be liable for any incidental or consequential damages, as defined in section 2-715 of the Uniform Commercial Code by a breach of this warranty.

Videolarm shall repair or replace defective products upon shipment of products prepaid to Videolarm, Inc., 2525 Park Central Blvd., Decatur, GA 30035.

Repairs made necessary by reason of accident, misuse or normal wear shall be charged at Videolarm's standard rate. This warranty gives you specific legal rights, and you may also have other rights which vary from state to state.

SAFETY PRECAUTIONS

CAUTION
RISK OF
ELECTRIC SHOCK!

CAUTION: TO REDUCE THE RISK OF ELECTRICAL SHOCK, DO N OT EXPOSE COMPONENTS TO WATER OR MOISTURE.

The lightning flash with an arrowhead symbol, within an equilateral triangle, is intended to alert the user to the presence of non-insulated "dangerous voltage" within the product's enclosure that may be of sufficient magnitude to constitute a risk of electric shock to persons.

The exclamation point within an equilateral triangle is intended to alert the user to presence of important operating and maintenance (servicing) instructions in the literature accompanying the appliance.

UNPACKING

Unpack carefully. Electronic components can be damaged if improperly handled or dropped. If an item appears to have been damaged in shipment, replace it properly in its carton and notify the shipper.

Be sure to save:

1. The shipping carton and packaging material. They are the safest material in which to make future shipments of the equipment.
2. These Installation and Operating Instructions.

SERVICE

If the unit ever needs repair service, the customer should contact Videolarm (1-800-554-1124) for authorization to return and shipping instructions.

TECHNICAL SUPPORT

If technical support is needed, Videolarm has setup a 24 hour technical support line for their customers.

24 HOUR TECHNICAL SUPPORT

1-800-554-1124